Cardiovascular Modeling & Experimentation Research Laboratory

Lumped-Parameter Modeling of Stage 1 Fontan Patients with Pulsatile and Continuous Flow Ventricular Assist Device Support

Department of Mechanical Engineering, Clemson University
Tyler Schmidt, MS Student
Ethan Kung, Assistant Professor

Objectives

- **Identify mechanisms responsible for differences in physiological response** between pulsatile and continuous flow ventricular assist devices (VAD)
- **Optimize VAD performance for Stage 1 Fontan patients**
- **Provide improved VAD implementation recommendations** to clinicians on a *patient-specific basis*

Background

About the Fontan Procedure

- The **Fontan Procedure** is a multi-stage surgical technique used to treat single ventricle physiologies[1]
- **Stage 1 operation** is typically performed shortly after birth and involves the creation of a shunt from a large artery to the pulmonary circulation[1]
- Since the operation is only palliative, patients may still experience symptoms of heart failure because of the increased volume loading on the one working ventricle[1]

About Ventricular Assist Devices

- **Ventricular Assist Devices** can be used as a bridge-to-recovery or bridge-to-transplant support option for Fontan patients[2]
- Among VAD patients, survival rates are around 20% lower for those with congenital heart defects than those without[2]
- A 2013 case from collaborators at Lucile Packard Children's Hospital at Stanford revealed that patient physiology can be healthy with one particular VAD (e.g. continuous flow) but unhealthy on another (e.g. pulsatile flow)

Methods

- A **lumped-parameter model** (LPM) shown in *FIGURE 1* is used to simulate a Stage 1 Fontan circulation

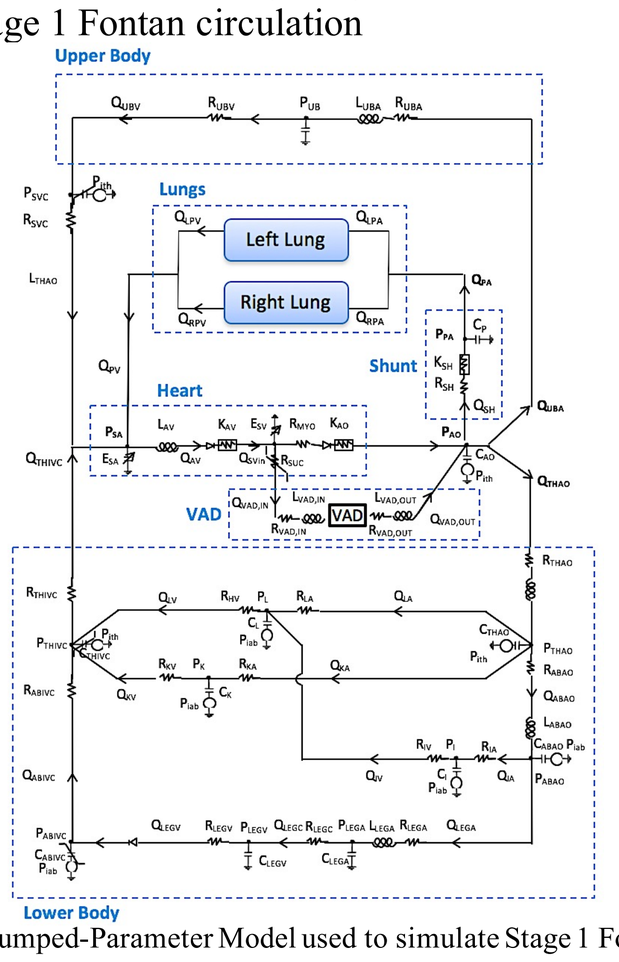

FIGURE 1. The Lumped-Parameter Model used to simulate Stage 1 Fontan physiology.

- **Tuning of the LPM** without the VAD is done first to match the patient physiology to clinical data. This is done by changing **patient specific parameters** and **initial values**
- A **model relating pressure and volumetric flowrate** is needed for each VAD that is tested with the LPM
- With the models developed, a **VAD** is connected to the LPM circuit in parallel between the ventricle and aorta. Then, **several VAD models are tested with the patient** to simulate the new patient physiology with VAD support
- **Run simulations with the VAD included** in the LPM to simulate the altered patient physiology. The contractility of the patient is reduced to simulate heart failure and VAD parameters are adjusted to meet the following requirements, if possible:
  a. Cardiac Output around 5 L/min
  b. Reduced mean tension in the ventricle (myocardial resting)
  c. Reduced mean atrial and pulmonary pressure (no congestion)
  d. No ventricular suction (to prevent damage to heart tissue)

References

[1] Nayak, Sandeep, Booker, PD. "The Fontan Circulation." *Continuing Care in Anesthesia, Critical Care and Pain* 2008; 1:26-30.
[2] Morales, David LS et al. "Use of Ventricular Assist Devices in Children Across the United States: Analysis of 7.5 Million Pediatric Hospitalizations." *The Society of Thoracic Surgeons* 2010; 90:1313-1319.

Results

Before the VAD simulations are performed, the LPM must be tuned to the clinical data from the patient. The corresponding baseline results from the LPM for a particular patient are shown in *TABLE 1* and *FIGURE 2*.

Parameter	Clinical	LPM	% Diff
Q_{UB} (mL/s)	5.58	5.45	2.3
Q_{LB} (mL/s)	5.71	5.64	1.2
Q_{LPA} (mL/s)	5.23	5.65	8.0
Q_{RPA} (mL/s)	4.50	4.69	4.2
P_{SA} (mm Hg)	6	5.28	12.0
P_{PA} (mm Hg)	12	11.16	7.0
P_{AO} (mm Hg)	52	52.16	0.3
Q_p/Q_s	0.86	0.89	3.5

TABLE 1. Comparison between clinical and LPM mean values for the same patient.

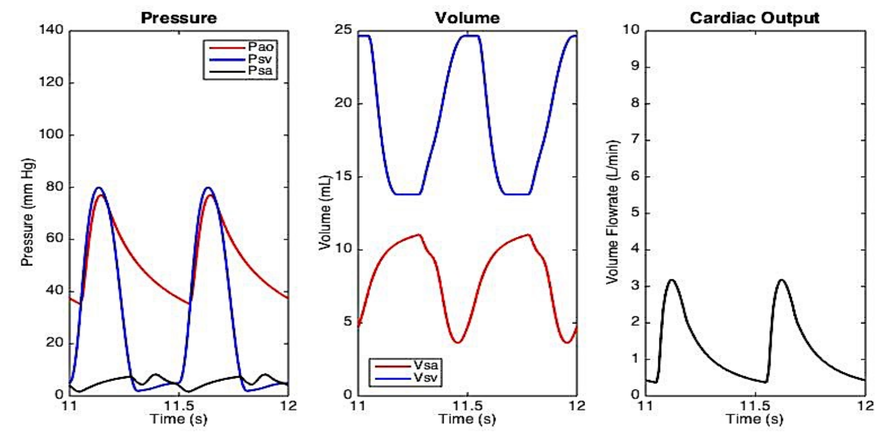

FIGURE 2. The LPM results tuned to clinical data before VAD support is applied.

When adding the VAD to the lumped-parameter model, the results in *FIGURE 3* are obtained for the *Berlin Heart pulsatile flow VAD* and the *Heartmate II continuous flow VAD* respectively.

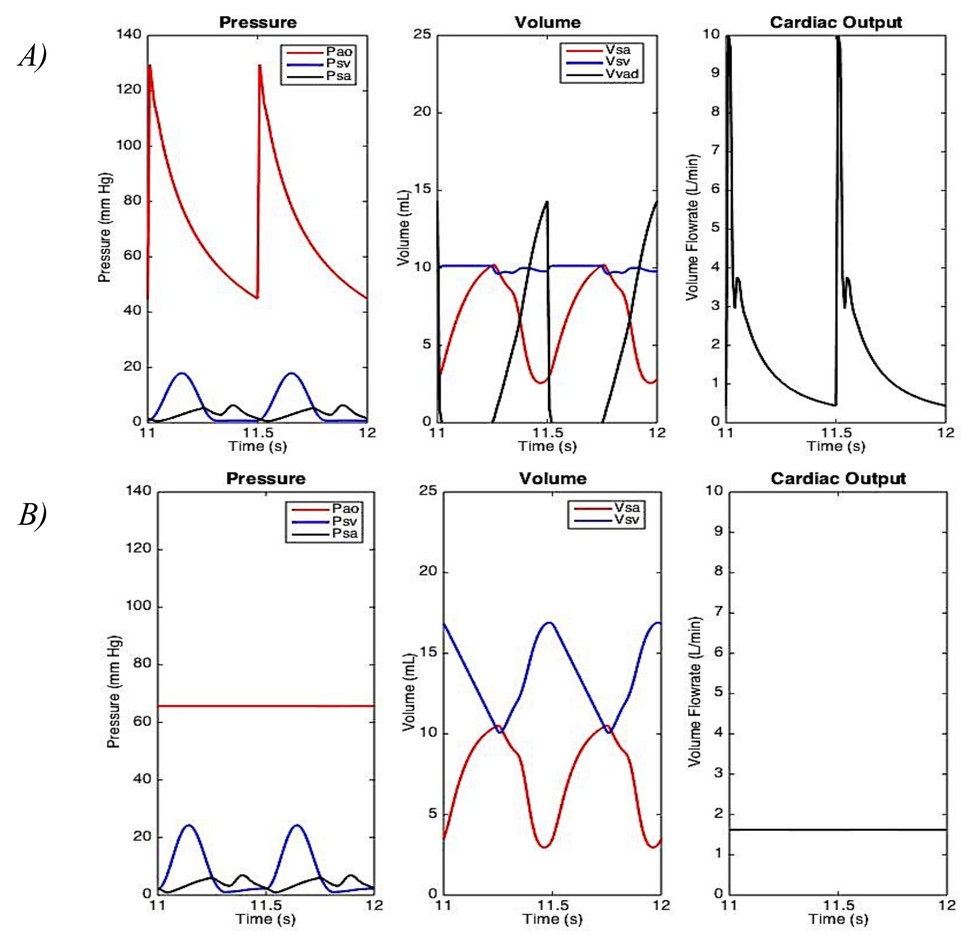

FIGURE 3. A) the LPM results for the pulsatile flow VAD
B) the LPM results for the continuous flow VAD

Conclusions

- **The tuned LPM was able to match baseline clinical data within 10%** for reported mean values except atrial pressure, P_{SA}
- **Cardiac output of pulsatile VAD is limited by the filling of the VAD**
- **Pulsatile VAD resulted in less stress on heart tissue** because of the reduced mean ventricular pressure and volumes ($\sigma \propto P\sqrt[3]{V}$)

Future Work

- Develop models to more accurately describe the physics of ventricular suction
- Use simulations for a patient cohort to better understand mechanisms responsible for physiological differences between pulsatile and continuous flow VAD support

Acknowledgements:
Stanford Pediatric and Congenital Cardiac Catheterization Lab
MOCHA Investigators

For more information, please contact
Tyler Schmidt at tmschmi@clemson.edu